48 pins diagnostic POD - type I

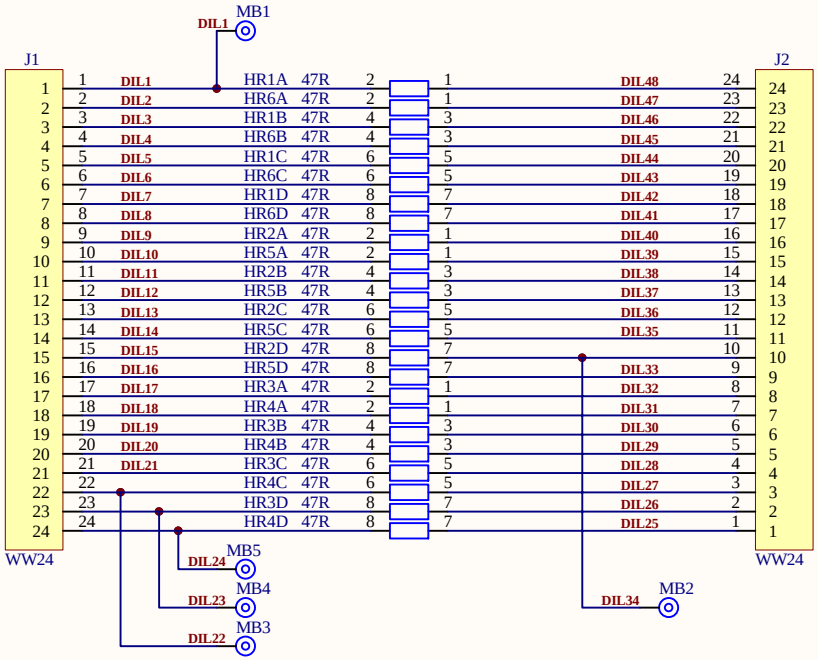

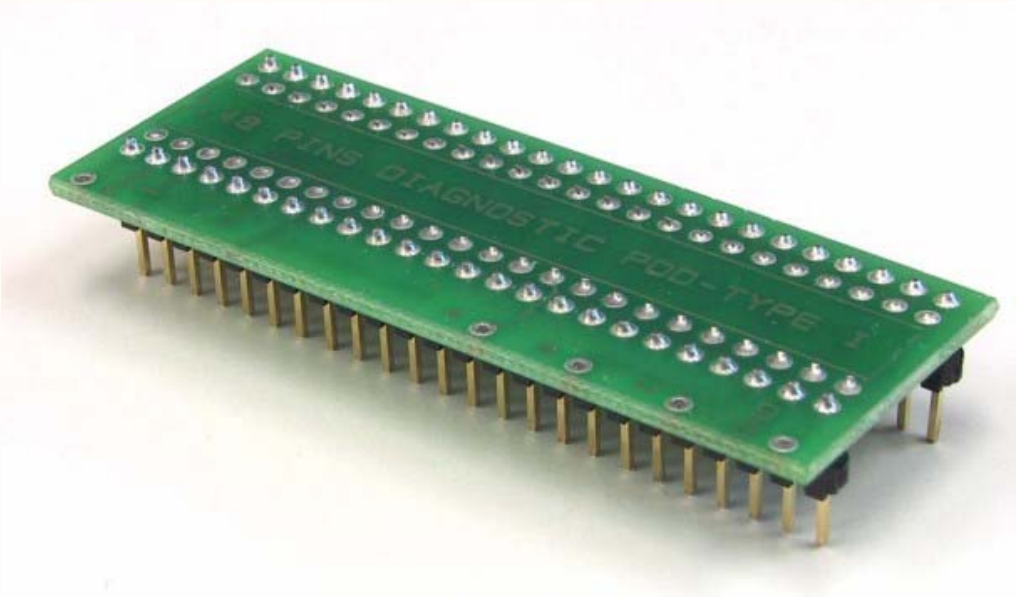

© ELNEC	ord.no.: KKA-0222
48 pins diagnostic POD - type I	